SIDERISE®
integrity in all we do

CW-FS / CW-CB QUICK REF TO INSTALLATION

VERSION 2.07 SEPTEMBER 2025

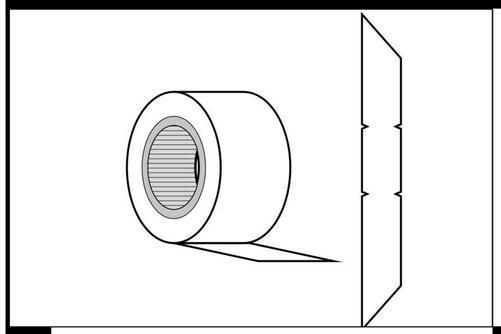

1 You need: Siderise® Fixing Brackets, Siderise® Foil Tape RFT 120/45, suitable non-combustible mechnical fixings appropriate to substrate, supplied by contractor.

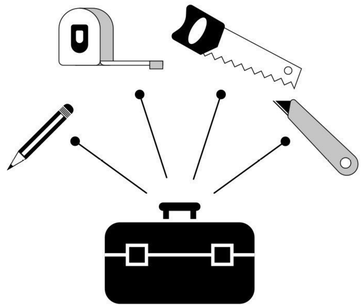

2 **Cutting on site** – tools required: marker, tape measure, knife and saw.

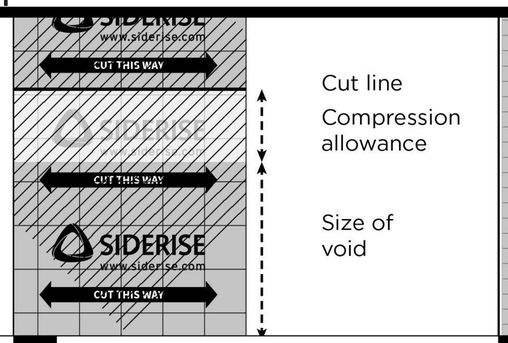

3 **Cutting on site** – Measure and mark the sheet: size of the void plus compression allowance as stated in the Certifire Certificate CF563 and product datasheet.

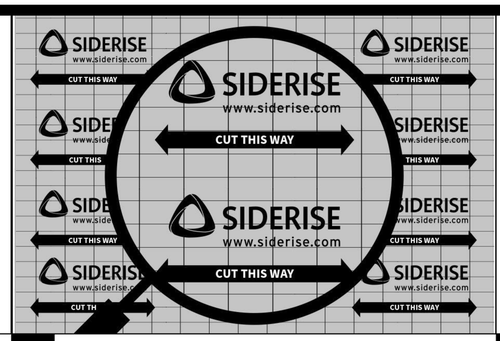

4 **Cutting on site** – Cut in the direction that is marked on the foil face of the CW-FS / CW-CB sheets.

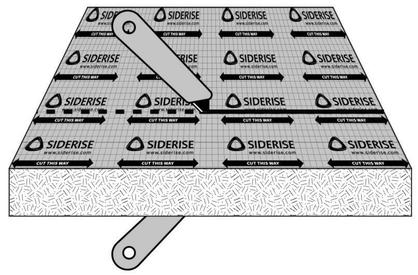

5 **Cutting on site** – Use a sharp knife to cut through the foil facings on both sides.

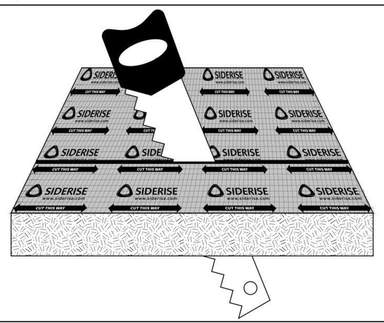

6 **Cutting on site** – Cut the stone wool with a saw, being careful not to rip the foil facing.

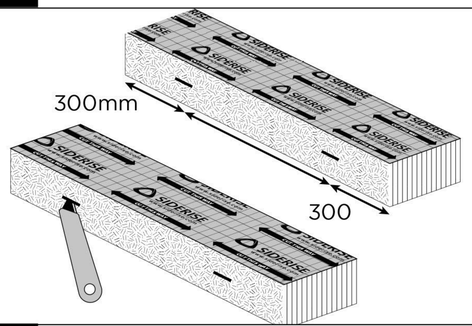

7 **Inserting brackets** - Impale fixing bracket mid thickness into CW-FS / CW-CB strip. A sharp knife can be inserted first to make it easier. Fixing brackets are impaled at nominal 600mm fixing centres, i.e. 300mm from each end.

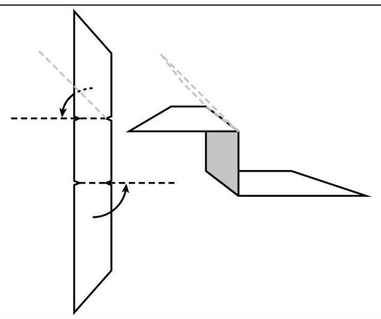

8 **Inserting Brackets** – Using personal protection equipment (e.g. gloves) fold the bracket as shown.

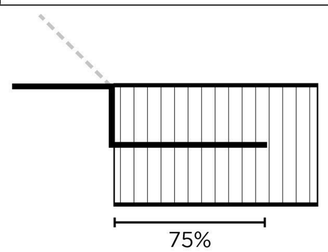

9 **Inserting Brackets** – Penetration of bracket is 75% of the width of the cut strip (e.g. if the cut strip is 100mm wide, bracket penetration is 75mm).

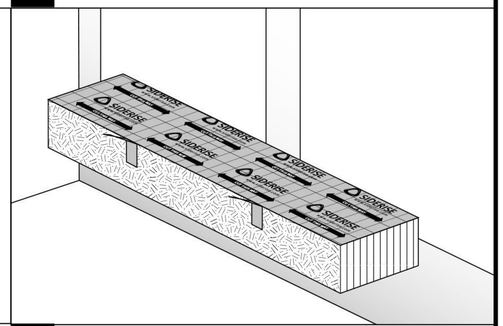

10 **Installing Barrier** - Take the CW-FS / CW-CB unit and apply manual compression to install it into the cavity.

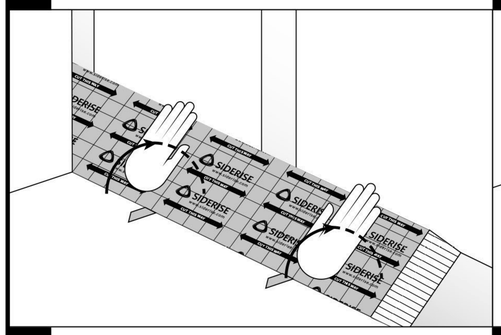

11 **Installing Barrier** - Take the CW-FS / CW-CB unit and apply manual compression to install it into the cavity.

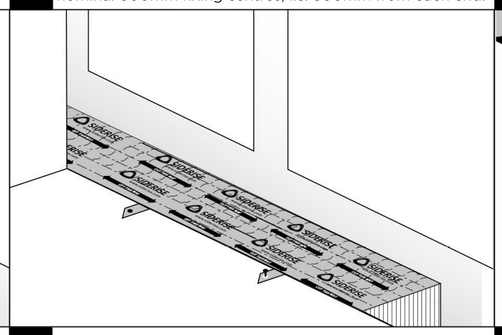

12 **Installing Barrier** – Secure non-combustible fixings in accordance with manufacturer's instructions, noting edge distance requirements.

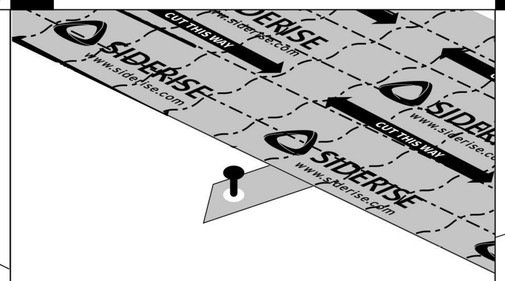

13 **Installing Barrier** – Secure non-combustible fixings in accordance with manufacturer's instructions, noting edge distance requirements.

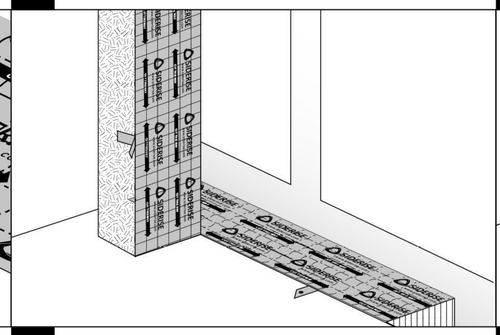

14 **Installing Barrier** – When cut strips are inserted into the cavity, the fixing brackets are simply located over the support structure.

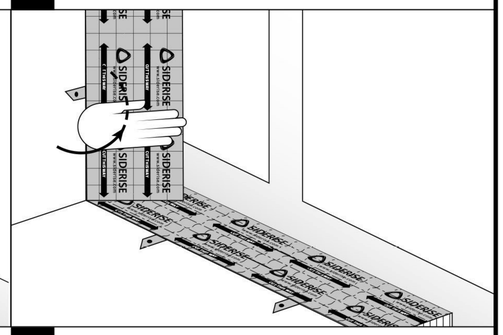

15 **Installing Barrier** – Apply manual pressure.

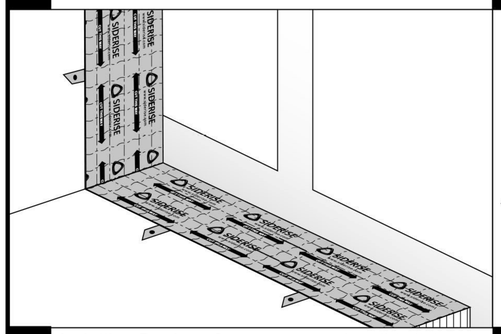

16 **Installing Barrier** – Secure non-combustible fixings in accordance with manufacturer's instructions, noting edge distance requirements.

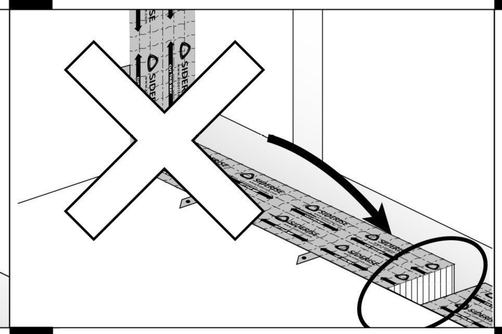

17 Install tightly abutted ensuring that there are no gaps between CW-FS / CW-CB strip sections.

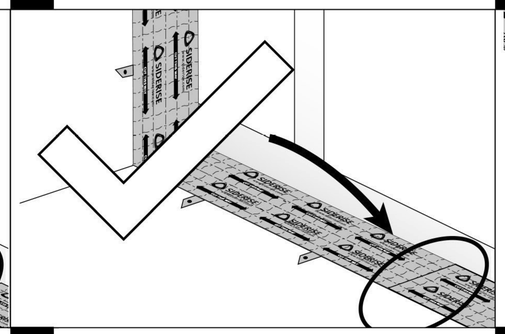

18 Install tightly abutted ensuring that there are no gaps between CW-FS / CW-CB strip sections.

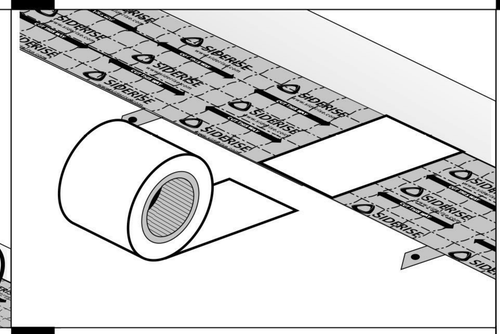

19 Seal the top face of all CW-FS / CW-CB abutted joints with Siderise foil tape RFT 120/45. **Corner joints should be mitred unless corner detail has no movement/locked in place.**

SCAN / CLICK HERE FOR

FURTHER INSTRUCTIONS

IFC Certification
CERT NO: IFCC 1763

Approved Product CF 563

These are generic instructions and not project specific. You may have interfaces between Siderise cavity fire barriers and façade system components which require independent detailing, therefore please contact Siderise to arrange on-site training. We reserve the right to amend installation recommendations without notice. Siderise Group, Forge Industrial Estate, Maesteg, Bridgend, CF34 0AH, UK. **www.siderise.com**